USL EKSPAN

SPHERICAL BEARINGS

G

BS5400-9

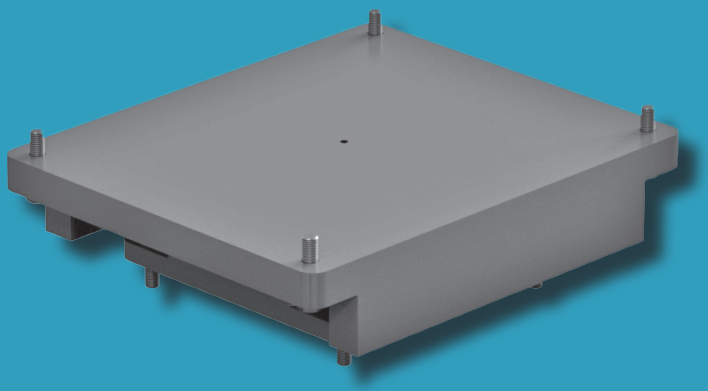

www.uslekspan.com

Description

G Series is a range of spherical structural bearings designed to permit angular rotations about any axis. Fixed, Free & Constrained bearings are available as standards to support loads up to 30,000kN.

The bearings fully meet the requirements of the British Department of Transport and BS5400 Section 9.

They are manufactured to meet all know quality standards throughout the world.

Bearing Types

The G range of bearings are available in three types: -

10G	Fixed
11G	Free to move in one horizontal direction
12G	Free to move in any horizontal direction

Typical 11G Details - Exploded View

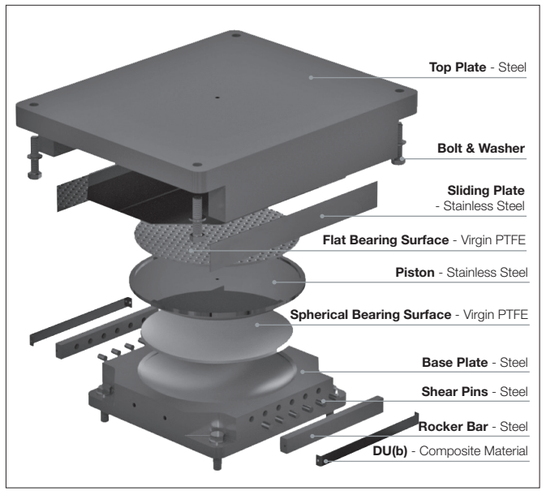

Attachment

Fixing holes are provided in the top and base members of the bearings. This enables a variety of fixing methods to be used. Standard fixings are designed to ensure the bearings can be removed as simply as possible. See page 10.

Support and Installation

Important - See pages 11 - 13 for Installation and Maintenance.

Concrete Stress

Where suitable reinforcement of the concrete has been provided the allowable concrete stress is dependent on the relative dimensions of the bearing/structure interface, the total support area and the characteristic strength of the concrete. The stress on the structure should therefore be checked to ensure that it is acceptable.

At the **Nominal Rating** capacity tabulated the mean stress approaches 20N/mm^2.

Design Loads

The designation of loadings varies depending on the design code employed. The tabulated load capacities list Nominal rating, at which load the base concrete stress is 20N/mm^2 maximum. **The working stress / serviceability limit state** maximum loads are determined by the allowable PTFE stresses. The **ultimate limit state** maximum load characteristics are determined by the strength characteristics of the bearing and incorporate the material and partial safety factors γ_m and γ_{f3} as required by BS5400.

The practice of stating working loads, or nominal loads is inappropriate for limit state designs. The SLS and ULS capacities represent design load effects, i.e. nominal loads to which ALL the appropriate factors have been applied. Factored loads must be provided to ensure correct bearing selection.

Rotation

All the bearings can rotate at least 0.035 radians about any horizontal axis. The maximum for each bearing is shown in the tables.

Translations

The dimensions for the 11G (Constrained) and 12G (Free) bearings are shown in the tables for the following movements -

Longitudinal		**Transverse**	
11G	100mm total	11G	NIL (see page 6)
12G	100mm total	12G	20mm total

Movements in increments of 50mm total can be supplied.
The top plate dimensions and the top fixing centres should be increased accordingly.

Note: **11G bearings should not be used where movement is required at right angles to the constraint.**

The required movements should be specified in the part number as described opposite.

Designation of Part No.

The part number of a bearing is simply built up as below –

Examples:

	Type	Maximum Working Load (kN)	Movement Longitudinal (mm)	Movement Transverse (mm)	Fixings Top	Fixings Base
a	**10G**	5000			S	S
b	**11G**	5000	100		B	S
c	**12G**	5000	100	20	N	B

Full part number for **c** above is 12G500/100/20/NB

This denotes a Free Spherical G bearing comprising of:

Working Load Capacity:	5000kN maximum
Movement - Longitudinal:	100mm total
- Transverse:	20mm total
Fixing Method:	No fixings in top plate Bolts in base plate

Fig. 1 G Spherical Bearing - Free

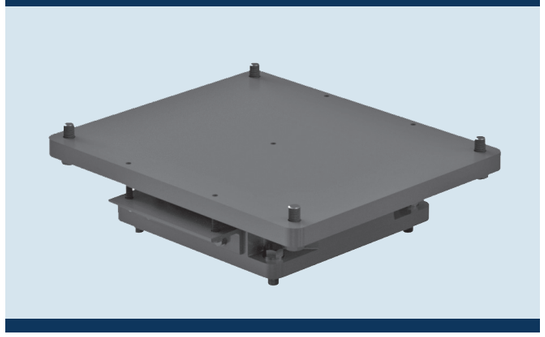

Fig. 2 G Spherical Bearing - Fixed

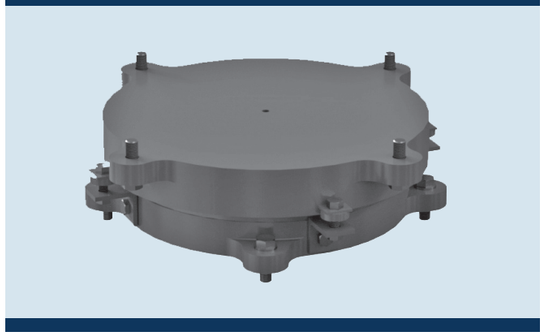

Fig. 3 G Spherical Bearing - Guided

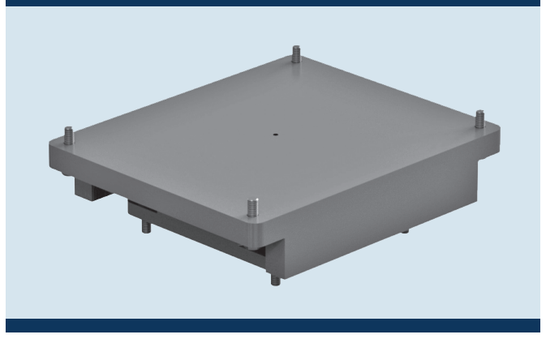

Bearing Design Loads

Bearings should be selected to suit the appropriate design code. The maximum vertical and horizontal loads shown in the tables may be taken in combination.

Horizontal Loading

The 10G fixed bearing will resist a horizontal force acting in any direction.
The horizontal load capacity is the lesser of two conditions -
a) 25% of the vertical load operating at the moment the horizontal force is present or
b) The loading shown in the load/dimension tables.

At ULS, the actual load combination may permit the use of a vertical load higher than that shown in the table.

We will be pleased to advise.

Concrete Stress

Where suitable reinforcement of the concrete has been provided the allowable concrete stress is dependent on the relative dimensions of the bearing/structure interface, the total support area, and the characteristic strength of the concrete. The stress on the structure should therefore be checked to ensure that it is acceptable.

At the Nominal Rating capacity tabulated the mean stress approaches 20N/mm^2.

Bearing No.	Nominal Vertical Rating Maximum (kN)	Working/Serviceability Limit State Loads: Vertical Permanent (kN)	Vertical All (kN)	Horizontal (kN)	Ultimate Limit State: Vertical (kN)	Horizontal (kN)
10G50	500	429	500	75	650	98
10G75	750	642	750	112	975	146
10G100	1000	851	1000	150	1300	195
10G150	1500	1301	1500	225	1950	293
10G200	2000	1718	2000	300	2600	390
10G250	2500	2121	2500	375	3250	488
10G300	3000	2566	3000	450	3900	585
10G350	3500	2970	3500	525	4550	683
10G400	4000	3403	4000	600	5200	780
10G450	4500	3865	4500	675	5850	878
10G500	5000	4256	5000	750	6500	975
10G550	5500	4666	5500	825	7150	1073
10G600	6000	5095	6000	900	7800	1170
10G700	7000	5891	7000	1050	9100	1365
10G800	8000	6745	8000	1200	10400	1560
10G900	9000	7656	9000	1350	11700	1755
10G1000	10000	8483	10000	1500	13000	1950
10G1200	12000	10110	12000	1800	15600	2340
10G1400	14000	11879	14000	2100	18200	2730
10G1600	16000	13611	16000	2400	20800	3120
10G1800	18000	15271	18000	2630	23400	3419
10G2000	20000	16826	20000	2830	26000	3679
10G2250	22500	19088	22500	3080	29250	4004
10G2500	25000	21044	25000	3330	32500	4329
10G3000	30000	25243	30000	3830	39000	4979

G - Series 10G - Fixed Spherical Bearing

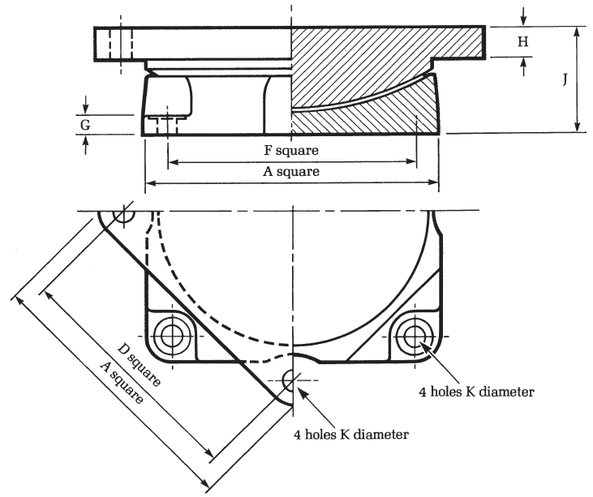

Bearing No.	Installation Dimensions (mm): A	D	F	G	H	J	K	Total Approx Weight * (Kg)
10G50	190	160	160	14	18	66	14	20
10G75	245	195	195	22	27	86	14	42
10G100	260	210	210	22	25	87	14	48
10G150	295	245	245	22	25	97	14	68
10G200	335	275	275	26	28	110	18	99
10G250	385	305	305	33	36	132	18	157
10G300	405	325	325	33	37	132	18	174
10G350	430	350	350	33	37	137	22	203
10G400	465	370	370	39	40	148	22	257
10G450	490	395	395	39	42	155	22	298
10G500	515	420	420	39	44	162	26	344
10G550	560	435	435	52	53	181	26	455
10G600	575	450	450	52	53	181	26	479
10G700	610	485	485	52	55	191	26	569
10G800	650	525	525	52	58	202	32	683
10G900	690	565	565	52	62	215	32	819
10G1000	730	580	580	61	66	227	32	968
10G1200	795	645	645	61	72	252	38	1275
10G1400	860	690	690	69	78	271	38	1604
10G1600	920	750	750	69	84	289	38	1957
10G1800	975	805	805	69	90	305	38	2320
10G2000	1030	860	860	69	96	273	38	2318
10G2250	1090	920	920	69	101	288	38	2738
10G2500	1150	980	980	69	107	307	38	3249
10G3000	1260	1090	1090	69	118	338	38	4293

* Weight excludes fixings

Bearing Design Loads

Bearings should be selected to suit the appropriate design code. The maximum vertical and horizontal loads shown in the tables may be taken in combination.

Horizontal Loading

The 11G guided bearing will resist a horizontal force acting at right angles to the main direction of movement.
The horizontal load capacity is the lesser of two conditions -
a) 25% of the vertical load operating at the moment the horizontal force is present or
b) The loading shown in the load/dimension tables.

At ULS, the actual load combination may permit the use of a vertical load higher than that shown in the table.

We will be pleased to advise.

Transverse Movement

11G bearings are designed to accommodate movement in one direction only. Movement transverse to the guide bars is nominally zero. In practice the transverse movement is 1.5mm maximum. Standard 11G bearings should not be used where movement is required at right angles to the constraint. Special bearings can be offered for such requirements.

Concrete Stress

Where suitable reinforcement of the concrete has been provided the allowable concrete stress is dependent on the relative dimensions of the bearing/structure interface, the total support area, and the characteristic strength of the concrete. The stress on the structure should therefore be checked to ensure that it is acceptable.
At the Nominal Rating capacity tabulated the mean stress approaches 20N/mm^2.

Bearing No.	Nominal Vertical Rating Maximum (kN)	Working/Serviceability Limit State Loads: Vertical Permanent (kN)	Vertical All (kN)	Horizontal (kN)	Ultimate Limit State: Vertical (kN)	Horizontal (kN)
11G50	500	429	500	50	650	65
11G75	750	642	750	75	975	98
11G100	1000	851	1000	100	1300	130
11G150	1500	1301	1500	150	1950	195
11G200	2000	1718	2000	200	2600	260
11G250	2500	2121	2500	250	3250	325
11G300	3000	2566	3000	300	3900	390
11G350	3500	2970	3500	350	4550	455
11G400	4000	3403	4000	400	5200	520
11G450	4500	3865	4500	450	5850	585
11G500	5000	4256	5000	500	6500	650
11G550	5500	4666	5500	550	7150	715
11G 600	6000	5095	6000	600	7800	780
11G700	7000	5891	7000	700	9100	910
11G800	8000	6745	8000	800	10400	1040
11G900	9000	7656	9000	900	11700	1170
11G1000	10000	8483	10000	1000	13000	1300
11G1200	12000	10110	12000	1100	15600	1430
11G1400	14000	11879	14000	1330	18200	1729
11G1600	16000	13611	16000	1480	20800	1924
11G1800	18000	15271	18000	1620	23400	2106
11IG2000	20000	16826	20000	1750	26000	2275
11G2250	22500	19088	22500	1898	29250	2467
11IG2500	25000	21044	25000	2031	32500	2640
11G3000	30000	25243	30000	2250	39000	2925

G - Series 11G - Guided Spherical Bearing

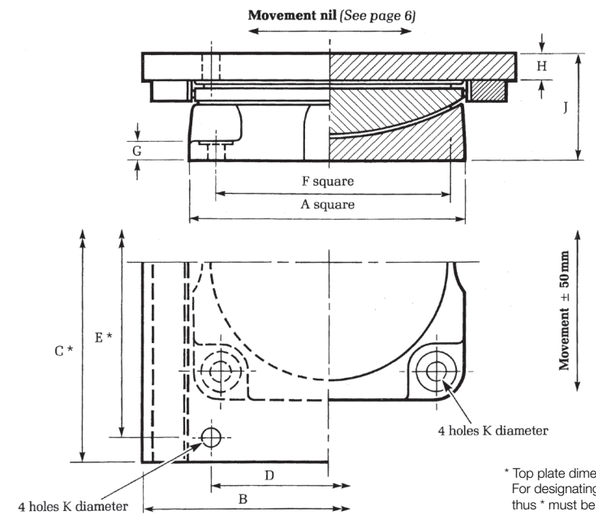

* Top plate dimensions are for the movements shown.
For designating increased movements the dimensions marked thus * must be increased accordingly. See page 3

Bearing No.	Installation Dimensions (mm): A	B	C	D	E	F	G	H	J	K	Total Approx Weight * (Kg)
11G50	190	275	310	160	280	160	14	13	80	14	23
11G75	245	315	365	195	315	195	22	17	98	14	41
11G100	260	350	380	210	330	210	22	17	102	14	49
11G150	295	410	415	245	365	245	22	22	120	14	78
11G200	335	460	455	275	395	275	26	27	136	18	112
11G250	385	495	500	305	420	305	33	27	147	18	143
11G300	405	540	540	325	460	325	33	32	161	18	184
11G350	430	565	575	350	495	350	33	32	168	22	217
11G400	465	610	605	370	510	370	39	37	182	22	269
11G450	490	635	640	395	545	395	39	37	189	22	311
11G500	515	660	665	420	570	420	39	37	194	26	352
11G550	560	695	695	435	570	435	52	42	214	26	423
11G600	575	715	720	450	595	450	52	42	215	26	454
11G700	610	765	770	485	645	485	52	47	230	26	566
11G800	650	805	815	525	690	525	52	47	239	32	671
11G900	690	840	860	565	735	565	52	52	253	32	814
11G1000	730	890	900	580	750	580	61	52	265	32	907
11G1200	795	960	975	645	825	645	61	57	289	38	1199
11G1400	860	1025	1045	690	875	690	69	62	310	38	1476
11G1600	920	1075	1110	750	940	750	69	67	327	38	1810
11G1800	975	1120	1175	805	1005	805	69	72	343	38	2163
11G2000	1030	1165	1230	860	1060	860	69	72	304	38	2199
11G2250	1090	1225	1300	920	1130	920	69	77	319	38	2620
11G2500	1150	1285	1365	980	1195	980	69	82	336	38	3103
11G3000	1260	1405	1485	1090	1315	1090	69	92	365	38	1431

* Weight excludes fixings

Bearing Design Loads

Bearings should be selected to suit the appropriate design code. If in doubt please ask our advice.

Concrete Stress

Where suitable reinforcement of the concrete has been provided the allowable concrete stress is dependent on the relative dimensions of the bearing/structure interface, the total support area, and the characteristic strength of the concrete. The stress on the structure should therefore be checked to ensure that it is acceptable.

At the Nominal Rating capacity tabulated the mean stress approaches 20N/mm^2.

Bearing No.	Nominal Vertical Rating Maximum (kN)	Working/Serviceability Limit State Loads Vertical Permanent (kN)	Ultimate Limit State Vertical (kN)
12G50	500	429	650
12G75	750	642	975
12G100	1000	851	1300
12G150	1500	1301	1950
12G200	2000	1718	2600
12G250	2500	2121	3250
12G300	3000	2566	3900
12G350	3500	2970	4550
12G400	4000	3403	5200
12G450	4500	3865	5850
12G500	5000	4256	6500
12G550	5500	4666	7150
12G 600	6000	5095	7800
12G700	7000	5891	9100
12G800	8000	6745	10400
12G900	9000	7656	11700
12G1000	10000	8483	13000
12G1200	12000	10110	15600
12G1400	14000	11879	18200
12G1600	16000	13611	20800
12G1800	18000	15271	23400
12G2000	20000	16826	26000
12G2250	22500	19088	29250
12G2500	25000	21044	32500
12G3000	30000	25243	39000

G - Series 12G - Free Spherical Bearing

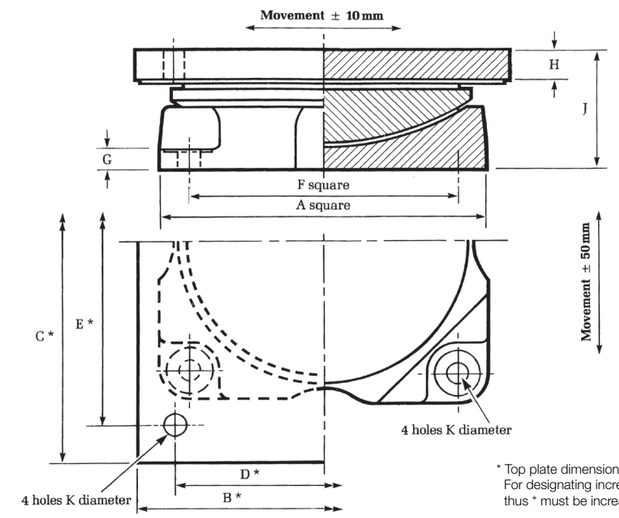

* Top plate dimensions are for the movements shown. For designating increased movements the dimensions marked thus * must be increased accordingly. See page 3

Bearing No.	Installation Dimensions (mm) A	B	C	D	E	F	G	H	J	K	Total Approx Weight * (Kg)
12G50	190	200	280	160	250	160	14	13	74	14	24
12G75	245	240	320	195	270	195	22	17	90	14	46
12GI00	260	275	355	210	305	210	22	17	93	14	55
12G150	295	330	410	245	360	245	22	22	109	14	85
12G200	335	380	460	275	400	275	26	27	124	14	125
12G250	385	420	500	305	420	305	33	27	132	14	170
12G300	405	460	540	325	460	325	33	32	145	14	212
12G350	430	495	575	350	495	350	33	32	151	14	249
12G400	465	525	605	370	510	370	39	37	164	14	314
12G450	490	560	640	395	545	395	39	37	169	14	360
12G500	515	585	665	420	570	420	39	37	174	14	406
12G550	560	615	695	435	570	435	52	42	191	14	518
12G600	575	640	720	450	595	450	52	42	191	14	549
12G700	610	690	770	485	645	485	52	47	205	18	671
12G800	650	735	815	525	690	525	52	47	214	18	790
12G900	690	780	860	565	735	565	52	52	229	18	954
12G1000	730	820	900	580	750	580	61	52	237	22	1096
12G1200	795	895	975	645	825	645	61	57	262	22	1435
12G1400	860	965	1045	690	875	690	69	62	281	22	1796
12G1600	920	1030	1110	750	940	750	69	67	300	22	2191
12G1800	975	1095	1175	805	1005	805	69	72	316	26	2597
12G2000	1030	1150	1230	860	1060	860	69	72	278	26	2564
12G2250	1090	1220	1300	920	1130	920	69	77	295	26	3050
12G2500	1150	1285	1365	980	1195	980	69	82	313	26	3595
12G3000	1260	1405	1485	1090	1315	1090	69	92	346	26	4762

* Weight excludes fixings

G - Series

Standard G Bearing Fixings

Standard G Bearing Fixings

By adding a two letter suffix to the bearing part number the type of fixingmay be designated -

First letter - Top plate fixing
Second letter - Base plate fixing

N - No fixings
B - Bolts and washers only
S - Bolts, washers & sockets

e.g. /BS signifies -
B (top plate fixing) Bolts & washers
S (base plate fixing) Bolts, washers & sockets

N.B. If standard G series fixings are not used, care should be taken to ensure that bolts can be fitted without dismantling the bearing.

Bolts are Hexagon Head to BS 3692 grade 8.8

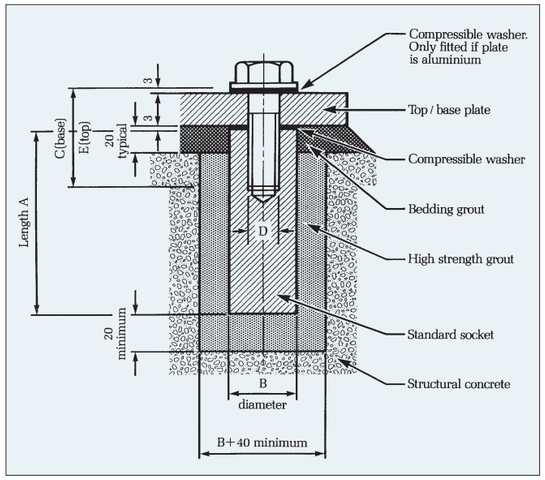

Bearing Type															
	10G					11G					12G				
Bearing Size	Socket		Bolt Base		Top	Socket		Bolt Base		Top	Socket		Bolt Base		Top
	B	A	D	C	E	B	A	D	C	E	B	A	D	C	E
0050	35	110	12	35	40	35	110	12	35	30	35	110	12	35	30
0075	35	110	12	45	50	35	110	12	45	35	35	110	12	45	35
0100	35	110	12	45	45	35	110	12	45	35	35	110	12	45	35
0150	35	110	12	45	45	35	110	12	45	40	35	110	12	45	40
0200	40	140	16	50	55	40	140	16	50	50	35	110	12	45	45
0250	40	140	16	60	60	40	140	16	60	50	35	110	12	55	45
0300	40	140	16	60	65	40	140	16	60	55	35	110	12	55	50
0350	50	170	20	65	65	50	170	20	65	60	35	110	12	55	50
0400	50	170	20	70	70	50	170	20	70	65	35	110	12	60	55
0450	50	170	20	70	70	50	170	20	70	65	35	110	12	60	55
0500	55	200	24	75	80	55	200	24	75	70	35	110	12	60	55
0550	55	200	24	85	90	55	200	24	85	75	35	110	12	75	60
0600	55	200	24	85	90	55	200	24	85	75	35	110	12	75	60
0700	55	200	24	85	90	55	200	24	85	80	40	140	16	80	70
0800	70	240	30	95	100	70	240	30	95	85	40	140	16	80	70
0900	70	240	30	95	105	70	240	30	95	90	40	140	16	80	75
1000	70	240	30	100	105	70	240	30	100	90	50	170	20	90	80
1200	80	300	36	110	120	80	300	36	110	100	50	170	20	90	85
1400	80	300	36	115	125	80	300	36	115	105	50	170	20	100	90
1600	80	300	36	115	130	80	300	36	115	110	50	170	20	100	95
1800	80	300	36	115	140	80	300	36	115	115	55	200	24	105	105
2000	80	300	36	115	145	80	300	36	115	115	55	200	24	105	105
2250	80	300	36	115	150	80	300	36	115	120	55	200	24	105	110
2500	80	300	36	115	155	80	300	36	115	125	55	200	24	105	115
3000	80	300	36	115	165	80	300	36	115	135	55	200	24	105	125

HANDLING, STORAGE, INSTALLATION & MAINTENANCE

Installation

CONSIDER THE EFFECTS IF BEARINGS ARE NOT CORRECTLY INSTALLED

Our structural bearings are manufactured to close tolerances by skilled technicians working in clean conditions. To obtain the requisite performance from bearings it is imperative that they are properly handled at the work site and installed with the same care as when they were assembled in the factory. The following notes will assist those responsible for specifying and supervising the installation of structural bearings.
Please note that Ekspan are able to provide installation and supervision.

Bearings must be installed with precision to meet the bridge and bearing design criteria.

Storage

Our structural bearings are protected from contamination under normal working conditions by an efficient sealing system. Care should be taken in storage to prevent contamination and damage to the working surfaces.

CORRECT

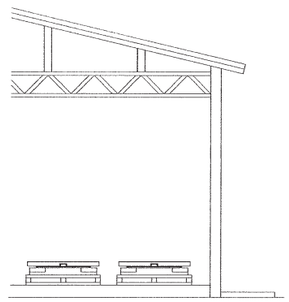

INCORRECT

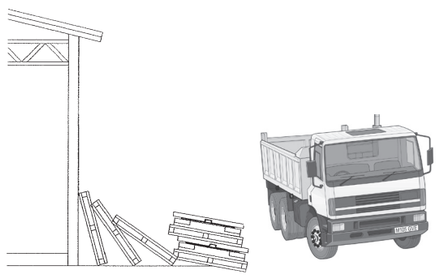

Handling

Robust transportation devices are fitted to all bearings to ensure that the components are maintained in their correct relative positions before and during installation. The devices are normally finished in red paint. Unless special devices have been specified, they should not be used for slinging or suspending the bearings beneath beams.

Due to unpredictable conditions, which may occur during transportation or handling on site, the alignment and presetting (if applicable) of the assembled bearing should be checked against the drawing. Do not endeavour to rectify any discrepancies on site. The bearing should either be returned to Ekspan or, where practical, an Ekspan engineer should be called in to inspect and reassemble. Bearings too heavy to be lifted by hand should be properly slung using lifting equipment.

CORRECT

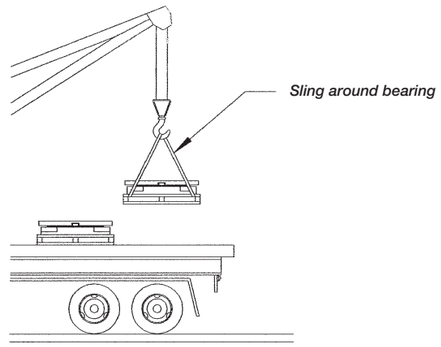

INCORRECT

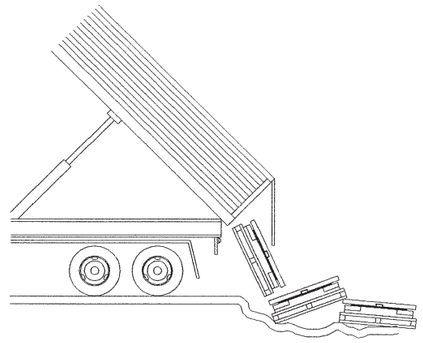

Presetting

If bearings are required to be preset eg where once only large movements may occur during stressing operations, this should be specified as a requirement and should only be carried out in our works prior to despatch. Do not attempt this operation on site.

Bedding

Bearings must be supported on a flat rigid bed. Steel spreader plates must be machined flat and smooth to mate exactly with the bearings' upper and lower faces. Bearings may also be bedded on epoxy or cement mortar or by dry packing. Whichever system is preferred for the particular structure it is of extreme importance that the final bedding is free from high or hard spots, shrinkage, voids, etc.

Unless there is a specific design requirement, the planar surfaces must be installed in a horizontal plane. The correct installation of bearings is vital for the bearing performance. Costly repairs become necessary all too often due to inadequate specification or poor site supervision. The bearings should not be loaded until the bedding mortar has cured.

Fixing bearings to concrete using permanent anchor plates

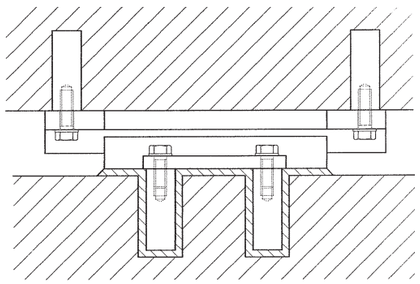

Cast-In-Situ Structures

Care must be taken to ensure that the bearings are not damaged by the formwork or contaminated by concrete seepage. The interface between the top plate and the formwork should be protected and sealed.

Owing to the loading effects of a wet concrete mass, the top plates should be propped to prevent rotation and plate distortion.

Fixing cast-in-situ structures ensure that the bearing working surfaces are protected and supported to prevent distortion and rotation.

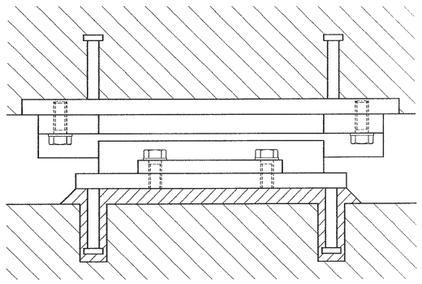

Bearing Removability

Where possible, bearings should be fixed in such a manner as to facilitate removal. Our bearings have generally been designed with this in mind. However, when selecting the bearing type preferred, the removability feature should be highlighted in your enquiry.

Removal of Transport Brackets

These brackets, normally painted red should only be removed once the bearing is properly installed and ready for operation.

Bearing Installation Check List

DO -

1. Handle carefully and where necessary with adequate craneage.
2. Store in a clean dry place.
3. Ensure that the bearings are installed in the correct location and orientation.
4. Ensure that the bearings are installed on a flat rigid bed before the design loads are applied.
5. Ensure that the fixings are uniformly tightened.
6. Complete any site coatings and make good paint damaged during handling and installation.
7. Protect working surfaces during the placing of in-situ concrete.
8. Keep the bearings and surrounding areas clean.
9. Remove any temporary transit clamps etc. before the bearings are required to operate.
10. Take special care to support top plates when casting in-situ concrete.

HANDLING, STORAGE,
INSTALLATION & MAINTENANCE

DO NOT -

1. Dismantle the bearing on site.
2. Leave bearings uncovered.
3. Attempt to modify without our approval.
4. Install without qualified supervision.

Site Coating

Care should be taken to ensure that working surfaces are not damaged in any site coating operation. After installation damaged coatings must be repaired irrespective of any call for site coatings. Exposed fixing bolts should be protected after final tightening. Any tapped holes exposed after removal of transportation brackets etc. (coloured red) should be sealed with self-vulcanizing silicone sealant.

Routine Maintenance of Bearings

1. Immediately following installation bearings shall be inspected to ensure that all aspects of 'Installation of bearings' have been adhered to and bearings shall subsequently be re-inspected not less frequently than every two years after their installation.
2. Paint and /or other specified protective coatings must be maintained in good and efficient condition and free from scratches or chips. Any areas of the protective coating showing damage or distress must be rectified.
3. Areas surrounding the bearings must be kept clean and dry and free from the adverse effects of external influences such as airborne debris or water/salt (for example emanating from leaking joints).
4. The wearing surfaces of the bearing must be checked to ensure that they are continuing to operate efficiently.
5. Fixing bolts must be checked for tightness.
6. Any bedding material showing signs of distress or ineffectiveness must be replaced and the reason for its failure investigated and corrected.
7. Routine inspections shall include a check that translational and rotational capacities of the bearing have not been exceeded and show no sign of being likely to exceed the requirements specified at the design stage.

G - Series

NOTES

CONVERSION TABLE

METRIC

Length	1 mm	=	0.03937 in
	1 m	=	3.281 ft
	1 m	=	1.094 yd
Area	1 mm^2	=	0.00153 in^2
	1 m^2	=	10.764 ft^2
	1 m^2	=	1.196 yd^2
Force	1 N	=	0.2248 lbf
	1 kN	=	0.1004 tonf
Stress and pressure	1 N/mm^2	=	145 lbf/in^2
	1 N/mm^2	=	0.0647 $tonf/in^2$
	1 N/m^2	=	0.0208 lbf/ft^2
	1 kN/m^2	=	0.0093 $tonf/ft^2$

IMPERIAL

Length	1in	=	25.4 mm
	1 ft	=	0.3048 m
	1 yd	=	0.9144 m
Area	1 in^2	=	645.2 mm^2
	1 ft^2	=	0.0929 m^2
	1 yd^2	=	0.8361 m^2
Force	1 lbf	=	4.448 N
	1 tonf	=	9.964 kN
Stress and pressure	1 lbf/in^2	=	0.0068 N/mm^2
	1 $tonf/in^2$	=	15.44 N/mm^2
	1 lbf/in^2	=	47.88 N/m^2
	1 $tonf/ft^2$	=	107.3 kN/m^2

USL EKSPAN - PRODUCT RANGE

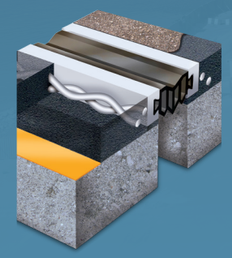

EXPANSION JOINTS - CD 357

Uniflex - Buried
BP1 - Buried
FEBA - Flexible Plug
Britflex NJ - Nosing
EC & EW - Joint Seal
Transflex & Transflex HM - Mat
T-MAT - Mat
Britflex BEJ - Modular
Britflex MEJS - Modular
LJ - Longitudinal Joint
ES - Joint Seal Aqueduct/Immersed Joint
Open Type Joint - Rail Joint
Britflex UCP - Footbridge Joint
Finger Joint
Roller Shutter Joint

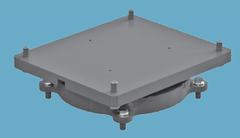

STRUCTURAL BEARINGS

EKE - Elastomeric (EN1337-3)
KE - Pot (EN1337-5)
DE - Linear Rocker (EN1337-6)
GE - Spherical (EN1337-7)
FE - Restraint & Guide (EN1337-8)
EA - Sliding Bearing
D - Linear Rocker (BS5400-9)
F - Restraint & Guide (BS5400-9)
G - Spherical (BS5400-9)
J - Roller (BS5400-9)
K - Pot (BS5400-9)
Link Bearing (BS5400-9)
EKR - Rubber Pad & Strip
EQF - Sliding Bearing
Bespoke Bearings

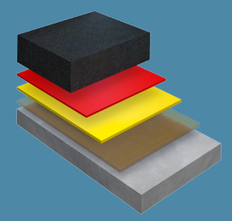

STRUCTURAL WATERPROOFING - CD 358

Pitchmastic PmB
Polyurethane (Pu) Waterproofing System
Britdex MDP
Methyl Methacrylate (MMA) Waterproofing System
Britdex CPM Tredseal
Combined Waterproofing and Anti Skid Surfacing (MMA)
Uradeck BC
Combined Waterproofing and Anti Skid Surfacing (Pu)

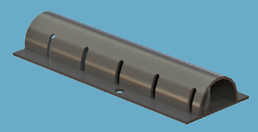

SUB-SURFACE BRIDGE DRAINAGE

Ekspan 325 Channel
Ekspan 302 System
ES Seal System
DriDeck

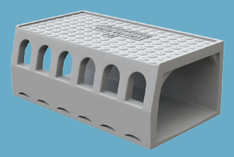

SURFACE BRIDGE DRAINAGE

Envirodeck

GROUP BRANDS

A world wide service offering effective solutions in:-

Inspection • Design • Manufacture • Supply • Installation • Commissioning • Planned Maintenance

USL Ekspan warrants that products described in this brochure are free from defects in workmanship and material, but unless expressly agreed in writing USL Ekspan gives no warranty that these products are suitable for any particular purpose or for use under any specific conditions notwithstanding that such purpose would appear to be covered by this publication. USL Ekspan accepts no liability for any loss, damage or expense whatsoever arising directly or indirectly from the use of their products. All business undertaken by USL Ekspan is subject to their standard conditions of sale, copies of which are available upon request. USL Ekspan products are subject to continual development and USL Ekspan reserves the right to make changes in the specification and design of their products without prior notice.

E&OE

Issue 01 - June 2020

Contact Us

Head Office
Kingston House, 3 Walton Road, Pattinson North,
Washington, Tyne & Wear, NE38 8QA, UK

t: +44 (0) 191 416 1530 **e**: info@uslekspan.com

Sales & Manufacturing
Compass Works, 410 Brightside Lane,
Sheffield, South Yorkshire, S9 2SP, UK

t: +44 (0) 114 261 1126 **e**: info@uslekspan.com

www.uslekspan.com

A USL INFRASTRUCTURE SERVICES Company